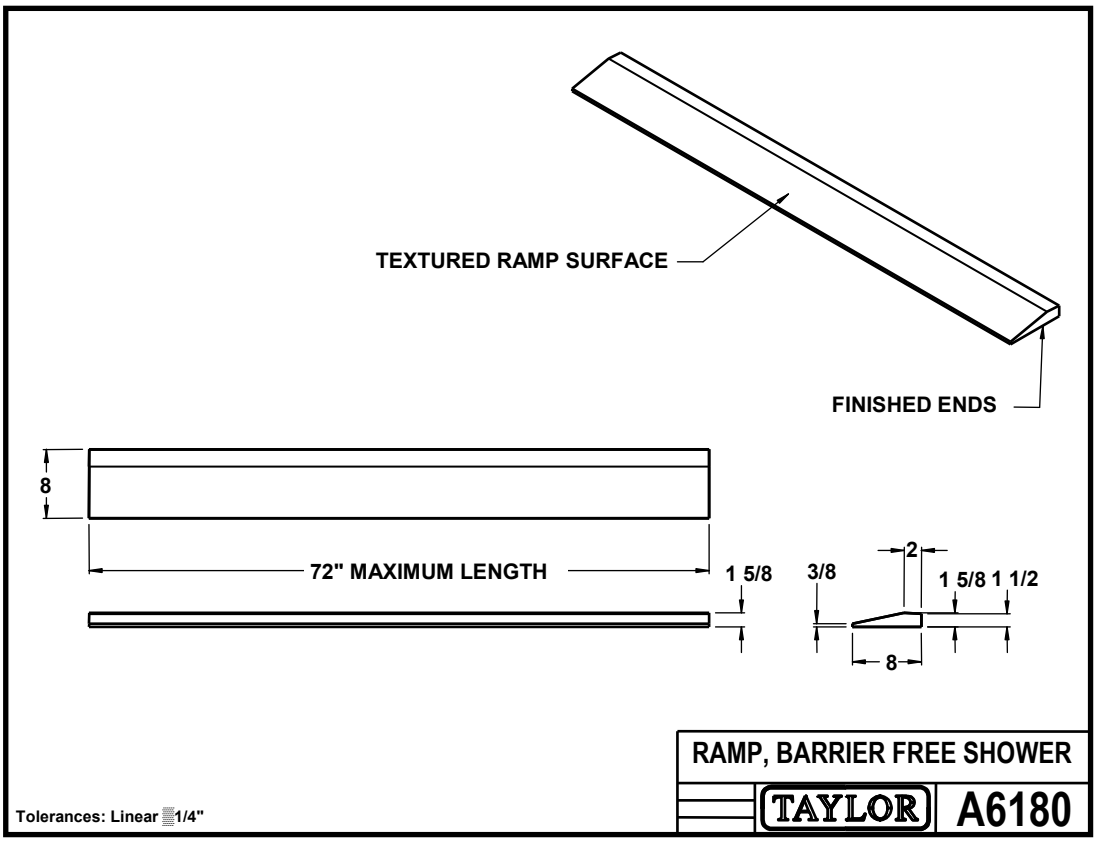
TEXTURED RAMP SURFACE
FINISHED ENDS
8
72" MAXIMUM LENGTH
1 5/8
3/8
2
1 5/8
1 1/2
8
RAMP, BARRIER FREE SHOWER
TAYLOR
A6180
Tolerances: Linear ±1/4"